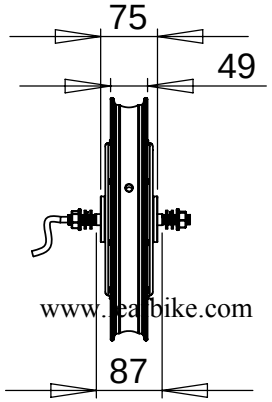
75
49
87
www.leafbike.com

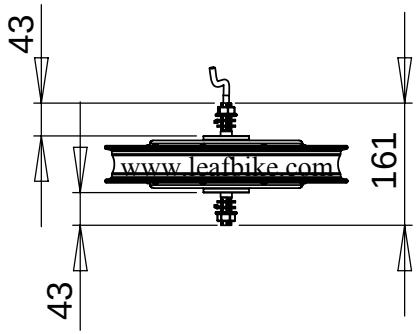
43
43
161
www.leafbike.com

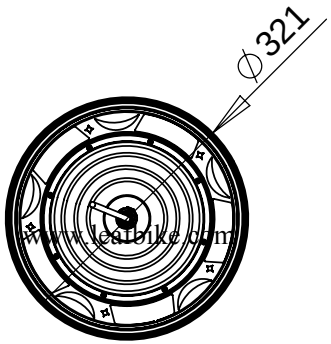
∅321
www.leafbike.com

www.leafbike.com