PIC144-MZ V2 Card (for OpenPIC Pro V2 Motherboard) Schematic

Hardware Revision v2

If you are experiencing some problems with any of our products or just need additional information,please contact our technical support:wxl07297662156@163.com

If you want to learn more about our product,please visit our website:

www.LogiFind.com

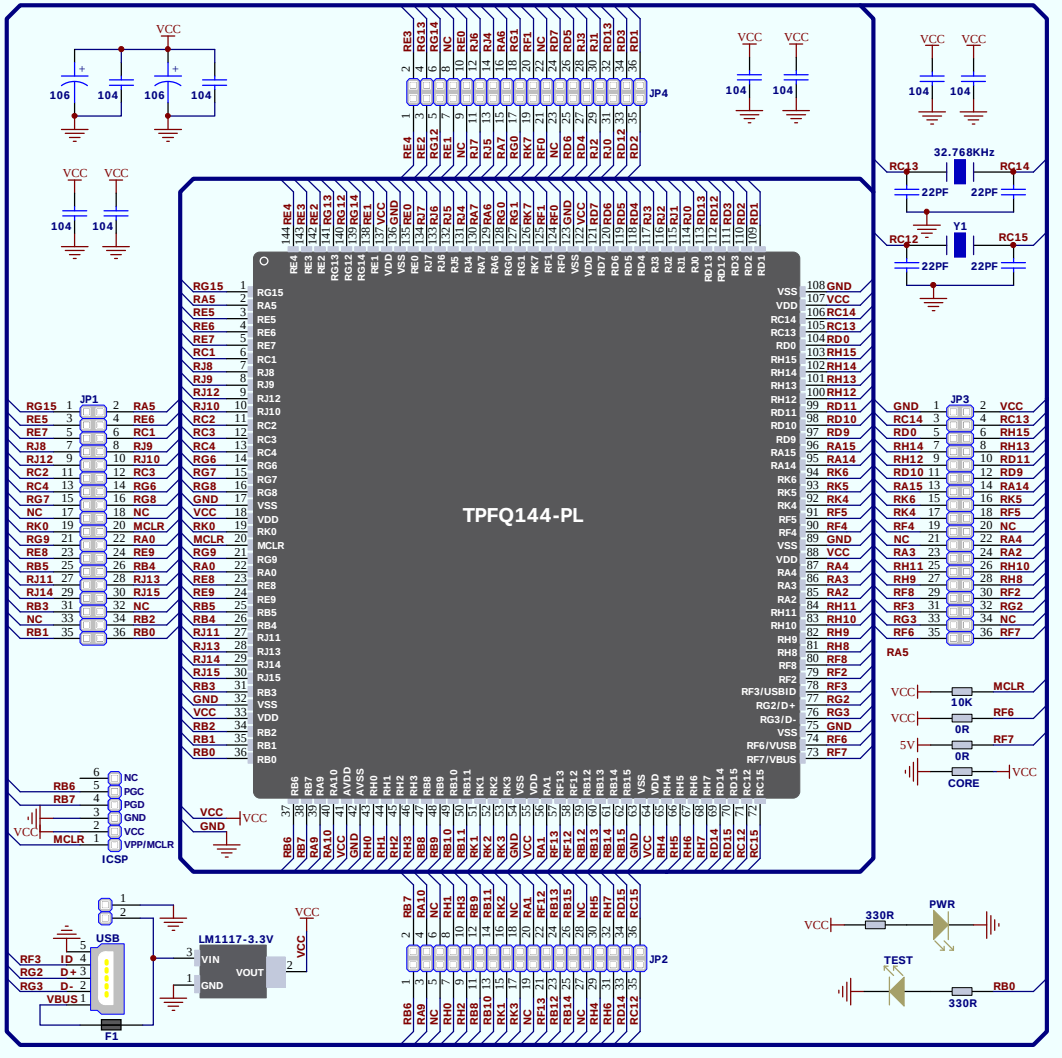

Title		
Size A3	Number	Revision
Date: 6-Aug-2020	Sheet of	
File: E:\LogiFind_Design.Ddb	Drawn By:	