WS MEDTECH
ENDOSCOPIC

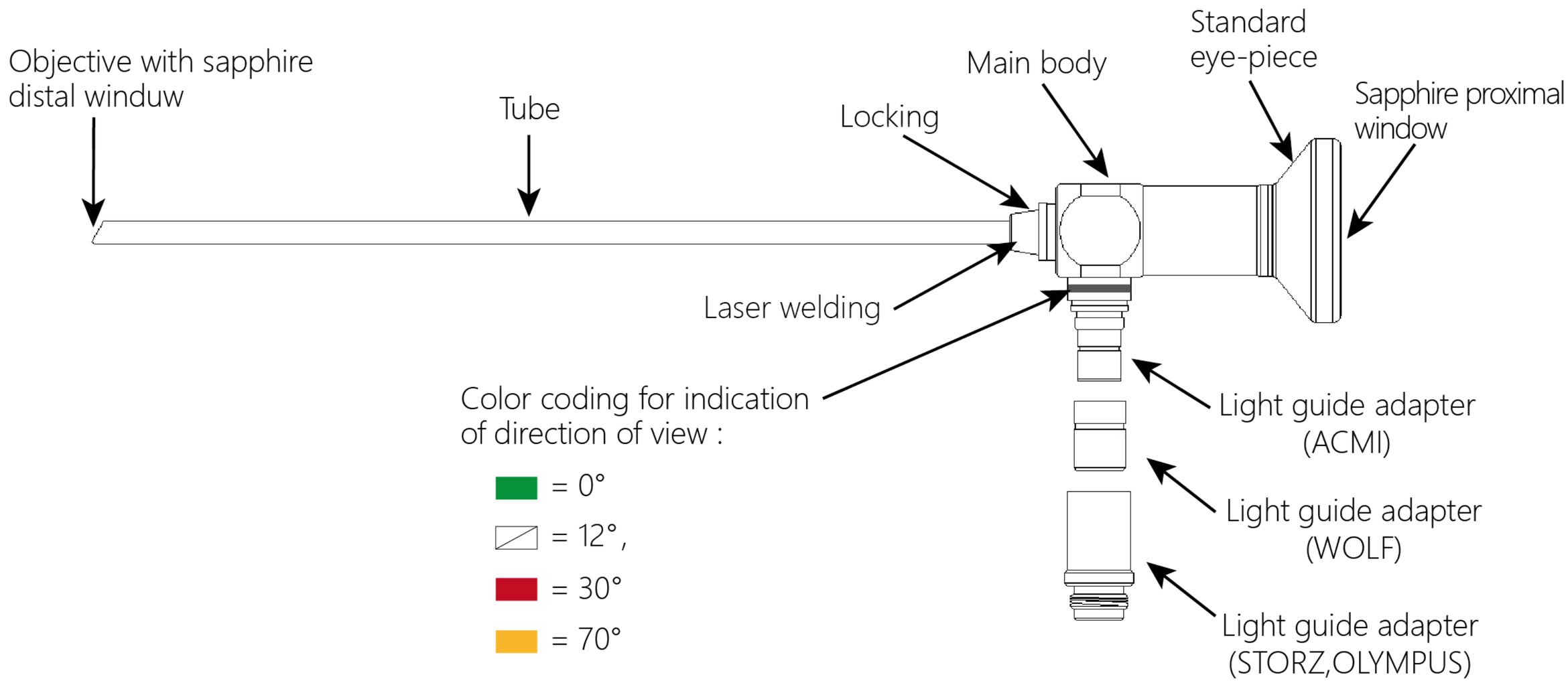

Technical Information

Featuring an innovative optical design that incorporates high-precision cylindrical lenses and advanced coating technology, this system delivers exceptional image sharpness and true-to-life color performance. Its optically optimized architecture enhances resolution while ensuring accurate color reproduction, providing clearer and more realistic visual representation for clinical observation.

1.High-performance optical fibers are individually selected based on application requirements, ensuring superior light transmission efficiency. The integrated laser welding technology enables optimal alignment between the fiber end face and the endoscope's field of view, resulting in uniform and shadow-free illumination in the operational area.

2.The endoscope is constructed with high-quality, non-corrosive German stainless steel tubing and assembled using state-of-the-art laser welding technology, offering robust durability and significantly extending the product's service life.

3.The rear optical interface is protected with scratch-resistant sapphire glass, and both the front and rear ends are hermetically welded to guarantee absolute sealing of the optical system.

4.All endoscopes and components undergo rigorous hermeticity testing verified through an internally developed helium-based leak detection procedure.

5.**They support full autoclaving at 134°C / 273°F for up to 500 cycles.**

6.Compliant with ISO 13485 standards.

OEM Customization

Customize Your Exclusive Logo

Customized Protective Sleeve Designed Exclusively for You

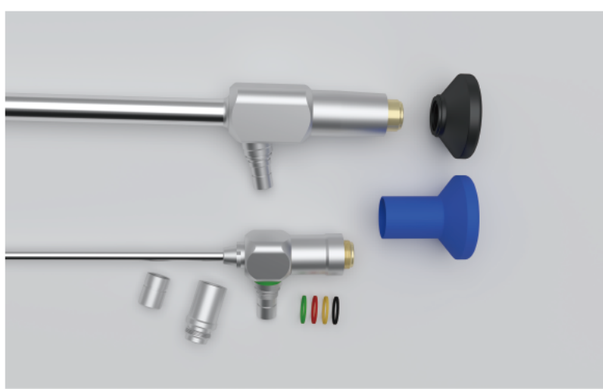

Customized Eye Mask Tailored to Your Needs

WS MEDTECH
ENDOSCOPIC

Sinoscope 4mm HD NIR/ICG — Autoclavable

Description	Length	Field of view	Model
HD Sinoscope 4mm 0°	175 mm	70°	B400FH
HD Sinoscope 4mm 30°	175 mm	70°	B403FH
HD Sinoscope 4mm 70°	175 mm	70°	B407FH

Arthroscope 4mm HD NIR/ICG — Autoclavable

Description	Length	Field of view	Model
HD Arthroscope 4mm 0°	175 mm	90°	G400FH
HD Arthroscope 4mm 30°	175 mm	90°	G403FH
HD Arthroscope 4mm 70°	175 mm	90°	G407FH

WS MEDTECH
ENDOSCOPIC

Cystoscope 4mm HD NIR/ICG — Autoclavable

Description	Length	Field of view	Model
HD Cystoscope 4mm 0°	302 mm	68°	P400FH
HD Cystoscope 4mm 12°	302 mm	68°	P401FH
HD Cystoscope 4mm 30°	302 mm	68°	P403FH
HD Cystoscope 4mm 70°	302 mm	70°	P407FH

Resectoscope 4mm HD NIR/ICG — Autoclavable

Description	Length	Field of view	Model
HD Resectoscope 4mm 0°	302 mm	68°	P400FH
HD Resectoscope 4mm 12°	302 mm	68°	P401FH
HD Resectoscope 4mm 30°	302 mm	68°	P403FH
HD Resectoscope 4mm 70°	302 mm	70°	P407FH

WS MEDTECH
ENDOSCOPIC

Hysteroscope 4mm HD NIR/ICG

Autoclavable

Description	Length	Field of view	Model
HD Hysteroscope 4mm 0°	302 mm	68°	P400FH
HD Hysteroscope 4mm 12°	302 mm	68°	P401FH
HD Hysteroscope 4mm 30°	302 mm	68°	P403FH
HD Hysteroscope 4mm 70°	302 mm	70°	P407FH

Cystoscope（Olymous Instr compatible）4MM HD NIR/ICG

Autoclavable

Description	Length	Field of view	Model
HD Cystoscope 4mm 0°	283 mm	68°	P400WHO
HD Cystoscope 4mm 12°	283 mm	68°	P401WHO
HD Cystoscope 4mm 30°	283 mm	68°	P403WHO
HD Cystoscope 4mm 70°	283 mm	68°	P407WHO

WS MEDTECH
ENDOSCOPIC

Laparoscope 5.5mm 4K NIR/ICG

Autoclavable

Description	Length	Field of view	Model
4K Laparoscope 5.5mm 0°	305 mm	72°	F550F4
4K Laparoscope 5.5mm 30°	305 mm	72°	F553F4

Laparoscope 10mm 4K NIR/ICG

Autoclavable

Description	Length	Field of view	Model
4K Laparoscope 10mm 0°	325 mm	80°	F100F4
4K Laparoscope 10mm 30°	325 mm	80°	F103F4